SPECIFICATION APPLIED

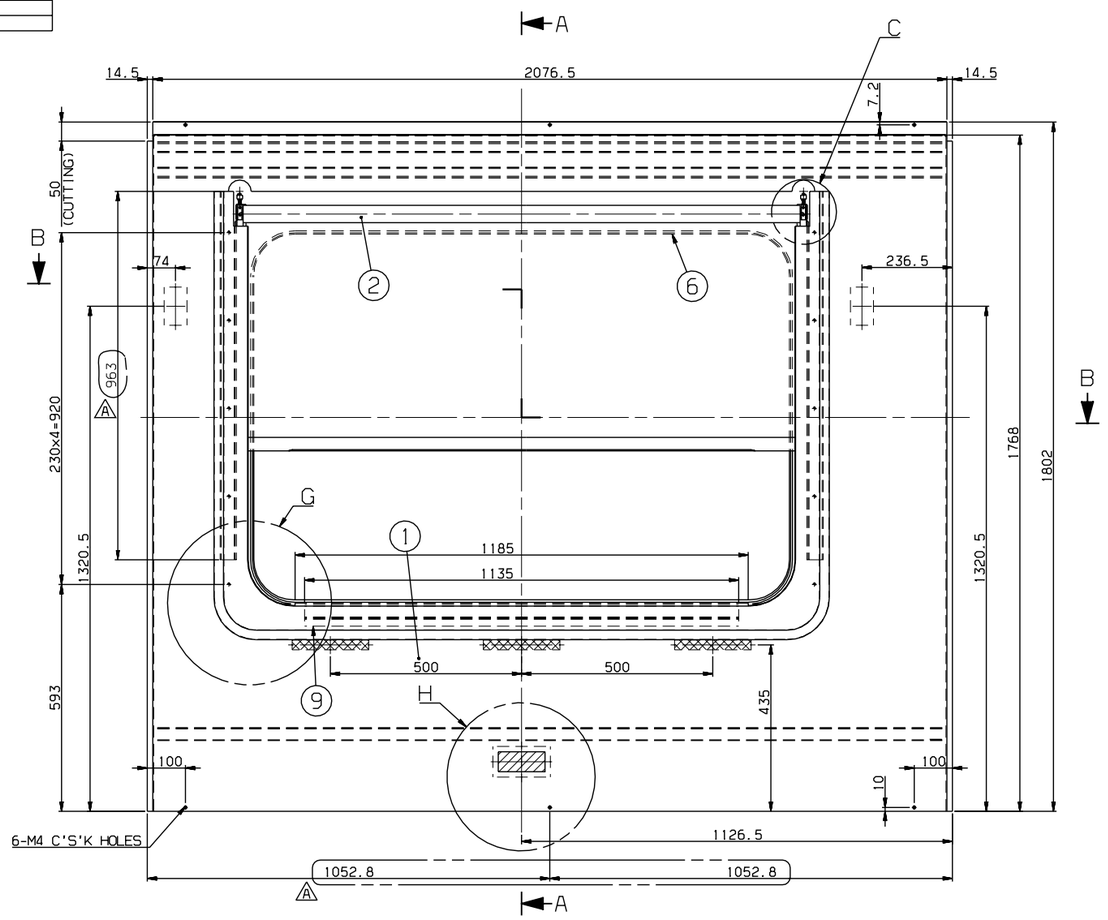

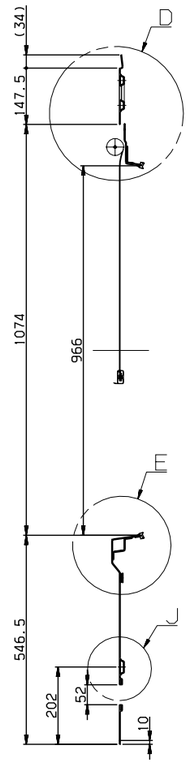

SECTION A-A

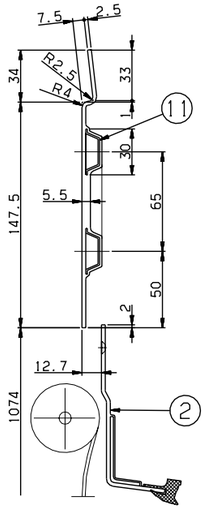

DETAIL D
SCALE=1/2

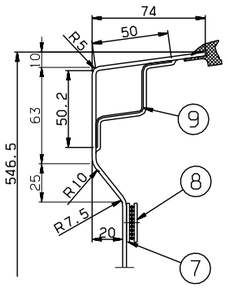

DETAIL E
SCALE=1/2

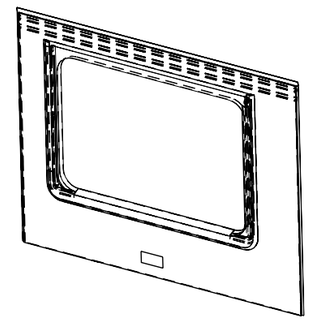

ISO VIEW

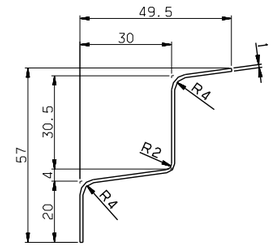

DETAIL #9
SCALE=1/1

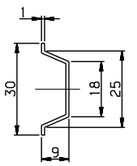

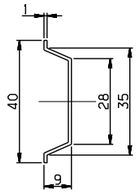

DETAIL #11
SCALE=1/1

DETAIL #10
SCALE=1/1

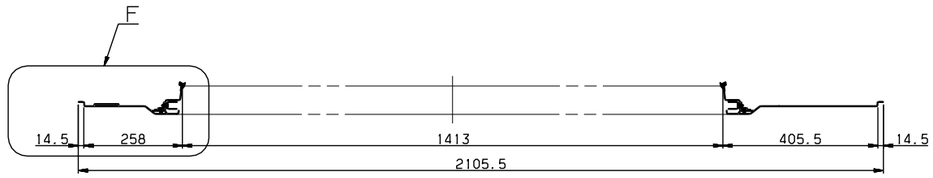

SECTION B-B

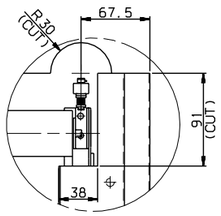

DETAIL C
SCALE=1/3

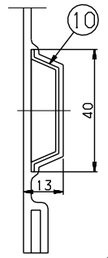

DETAIL J
SCALE=1/1

NOTE

1. AN INTERIOR PANEL'S COLOR(RAL 7047) AND SURFACE SHALL BE MANUFACTURED AFTER SAMPLE'S APPROVAL BY CUSTOMER
2. PART 6 SHALL BE CUT ADEQUATELY AND USED
3. PART 2 SHALL BE WELL OPERATED UNDER CONDITION OF ASSEMBLY
4. PART 7 SHALL BE FIXED ON THE PART 1, AND PART 8 SHALL BE DELIVERED SEPERATETLY
5. THE INTERFACE BETWEEN PART 1 AND PART 2 SHALL BE STRONGLY SEALED
6. PART 4 SHOULD BE APPLIED WITH PART 13.

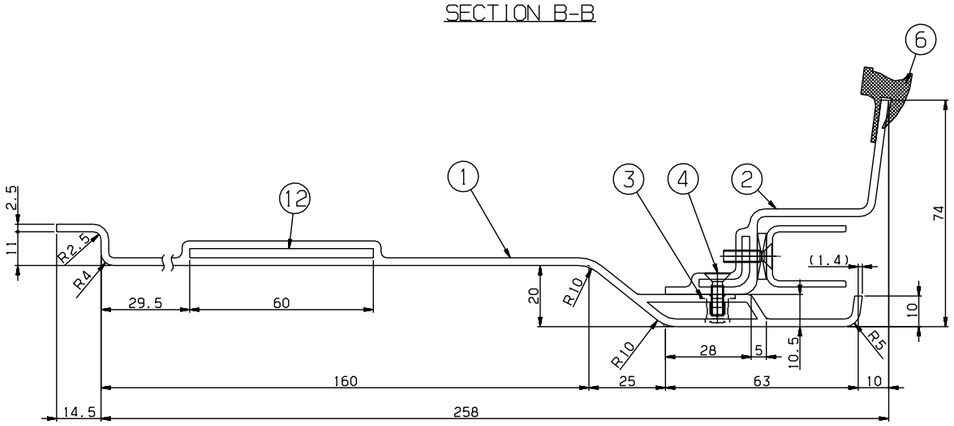

DETAIL F
SCALE=1/1

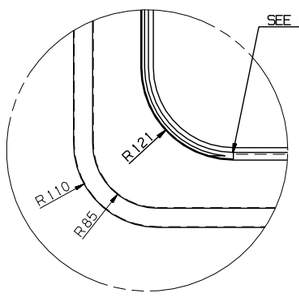

DETAIL G
SCALE=1/4

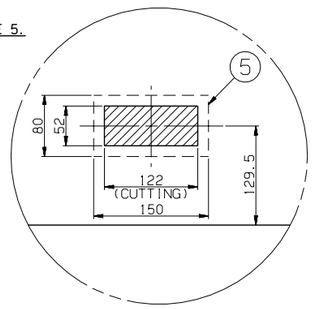

DETAIL H
SCALE=1/4

13	CP910004-406	ADHESIVE	ASSY	1		LOCTITE 242	
12	RFP51125EJ0-012	SEAT,TAP	SUS304	2		PL T3x100x60	
11	RFP51125EJ0-011	STIFFENER	A1050P	2		T1	
10	RFP51125EJ0-010	STIFFENER	A1050P	1		T1	
9	RFP51125EJ0-009	STIFFENER	SUS304	1		T1,L=1335	
8	RFP51125EJ0-008	DUAL_LOCK,FASTENER	ASSY	3		3M,SJ-3550 L=200(DUAL TAPE)	
7	RFP51125EJ0-007	DUAL_LOCK,FASTENER	ASSY	3		3M,SJ-3551 L=200(DUAL TAPE)	
6	RFP51125EJ0-006	RUBBER,SECTION	ASSY	1		RFP51011ANO,L=4600	
5	RFP51125EJ0-005	SEAT,TAP	SUS304	1		PL T3x150x80	
4	RS60607-098S	SCREW,F.H	SUS304	10		M4x14	
3	RFP51125EJ0-003	NUTSERT	SUS304	10		M4	
2	RFP51009AN0	PANEL,BLIND WINDOW	ASSY	1			
1	RFP51125EJ0-001	PANEL	FRP	1		T2.5	

품번 NO.	부품 번호 PART NO.	품명 DESCRIPTION	재질 MATERIAL	수량 Q'TY	중량 W.T	비고 REMARKS

승인 APP	JeongYul Lee 2014.10.14	재질 MAT'L	ASSY
검도 CHK	KeongBong Park 2014.10.14	총중량 G.W	
설계 DGN	HeonUk Lee 2014.10.14	일반공차 MC / WD / CT	B / B / B
제도 DRG	HeeSook Jeong 2014.10.14	SIZE	A1

마감 상태 TITLE: WINDOW,MASK,TYPE T

도면 번호 DRG. NO: RFP51125EJ0 MS | Ver. 00 | Rev. -A

SCALE 1/8 | 매수 SHEET 1 of 1

RSD1402 | RFP- | 본-PRJT | 설리번호

HYUNDAI Rotem 현대로템주식회사

기호 MARK	일자 DATE	변경내역 DETAIL OF REVISION(E.C ZONE)	설변번호 E.C NO.	설계 DGN	검도 CHK	승인 APP
Ax4	2014.12.18	ADDED PART NO.#13 & DIMENSION	RSD1402-U071	H.U.LEE	K.B.PARK	J.Y.LEE

일반공차 GENERAL TOLERANCE				
가공치수별 일반공차표				
기계 가공품 MACHINING (±)				
등급 GRADE	A	B	C	
~ 3	0.05	0.1	0.2	
~ 6	0.05	0.1	0.2	
~ 30	0.1	0.2	0.5	
~ 120	0.15	0.3	0.8	
~ 315	0.2	0.5	1.2	
~ 1M	0.3	0.8	2.0	
~ 2M	0.5	1.2	3.0	
~ 4M	0.8	2.0	4.0	
~ 6M	-	3.0	5.0	
~ 10M	-	5.0	7.0	
~ 12M	-	4.0	6.0	
~ 20M	-	6.0	8.0	
용접 구조물 WELDING (±)				
등급 GRADE	A	B	C	
~ 10	1	1	1.5	
~ 30	1	2	3	
~ 400	2	3		
~ 800	3	4		
~ 1600	4	5		
~ 3150	-	7		
주물, 수지품 CASTING (±)				
등급 GRADE	A	B	C	
~ 3	0.5	1		
~ 10	1	1.5		
~ 30	2	3		
~ 40	2	4		
~ 100	1.5	2		
~ 200	1	1.5		
등급 GRADE	A	B		
~ 315	1	2	4	
~ 120	1	2	3	
~ 30	1	1	1	
~ 6	0.5	0.5	0.5	
~ 1M	2	3	6	
~ 2M	3	4	8	
~ 4M	4	6	11	
~ 6M	5	8	14	
~ 10M	6	10	18	
~ 15M	7	12	21	
~ 20M	8	14	24	

본 도면은 당사 재산이므로 무단복제/배포 금지. PROPERTY OF ISSUING ENTITY. CANNOT BE DISTRIBUTED OR REPRODUCED WITHOUT AUTHORIZATION.

CATIA